FOOTPRINT
HINES MODEL 300NC

SIDE VIEW

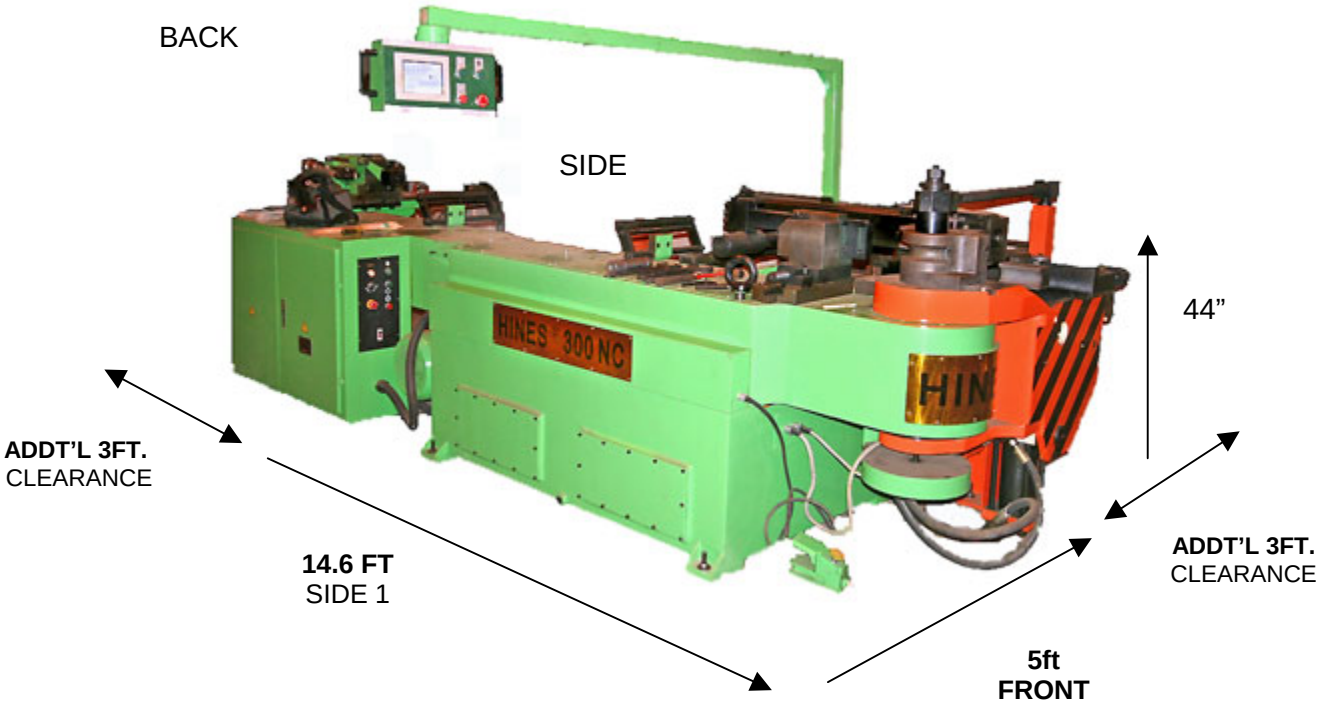

TOP VIEW
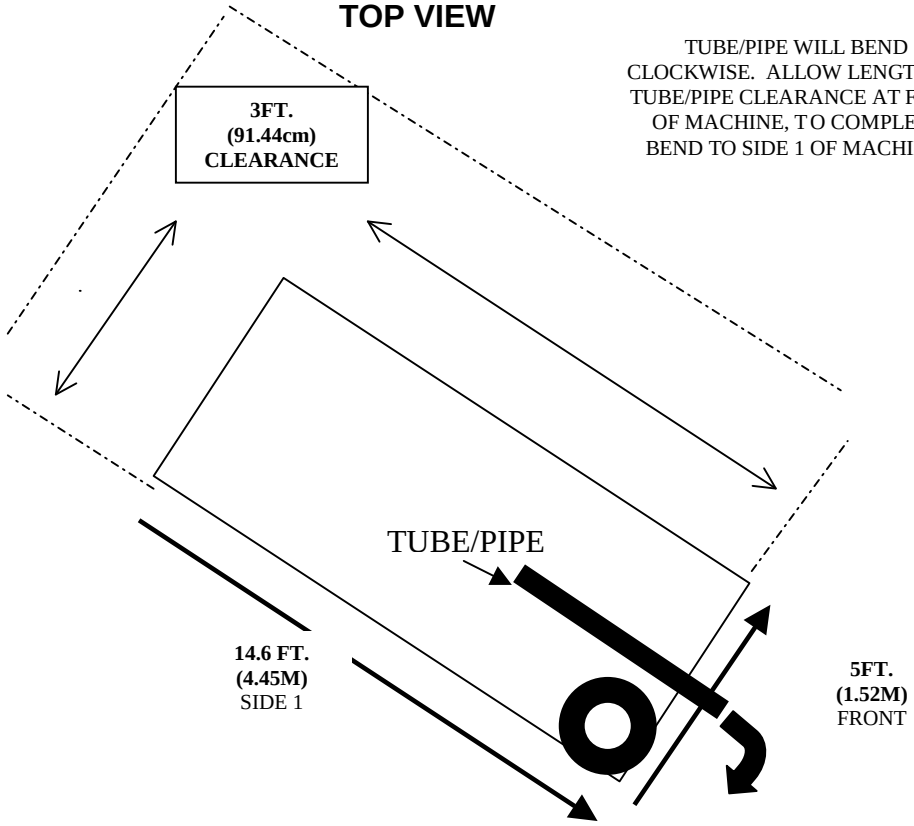
TUBE/PIPE WILL BEND CLOCKWISE. ALLOW LENGTH OF TUBE/PIPE CLEARANCE AT FRONT OF MACHINE, TO COMPLETE BEND TO SIDE 1 OF MACHINE.